NOTES:

1. ALLOWABLE OPTICAL MATERIAL:

   OPTICAL GRADE SILICON

2. CENTERING TOLERANCE: <3 ARCMIN

3. COATING (APPLY ACROSS CLEAR APERTURE)

   S1: BBAR MULTILAYER FOR R(AVG) < 2% FROM 3.0 TO 5.0 MICRONS
   S2: BBAR MULTILAYER FOR R(AVG) < 2% FROM 3.0 TO 5.0 MICRONS

4. FINE GRIND SURFACE

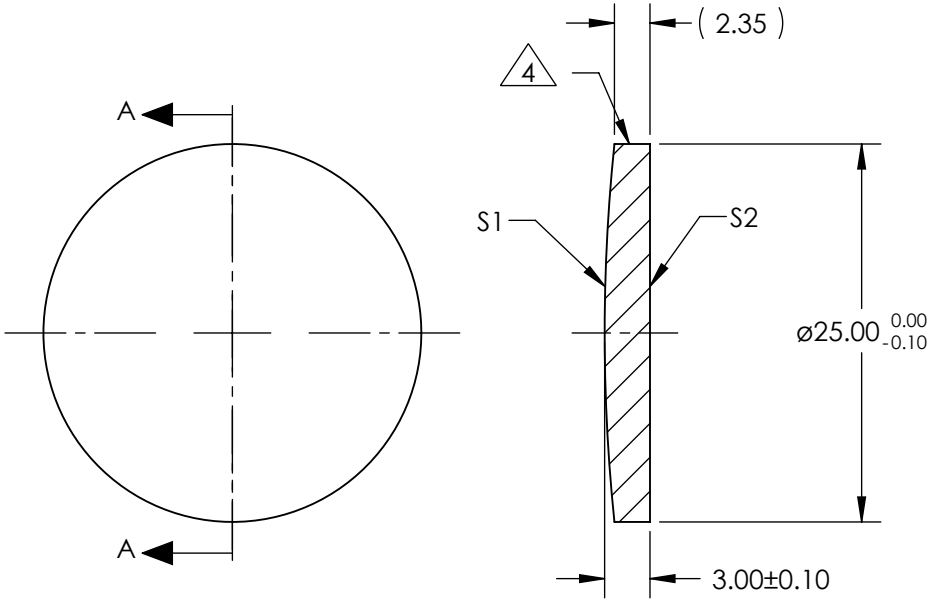

SECTION A-A

FOR INFORMATION ONLY:
DO NOT MANUFACTURE PARTS TO THIS DRAWING

	S1	S2
SHAPE	CONVEX	PLANO
RADIUS	120.880	INFINITY
SURFACE QUALITY	60 - 40	60 - 40
CLEAR APERTURE	ø24.00	ø24.00
BEVEL MAX FACE	0.25 x 45°	0.25 x 45°

EFL (AT 10.6 microns)	50.00	Edmund Optics®		
BFL (AT 10.6 microns)	49.12	TITLE	Plano-Convex Lens, Silicon, 25mm Dia x 50mm FL, AR coated for 3-5µm	
ALL DIMS IN	mm	DWG NO	69686	SHEET 1 OF 1