NOTES:

1. SUBSTRATE:
   Fused Silica (Corning 7980)

2. TEMPERATURE RANGE:
   -40 TO +170 °C

FOR INFORMATION ONLY:
DO NOT MANUFACTURE PARTS TO THIS DRAWING

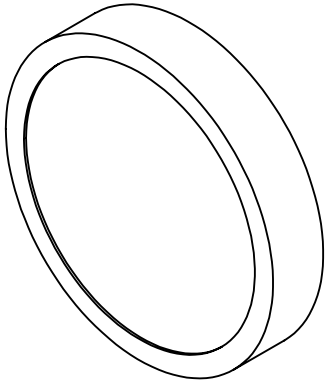

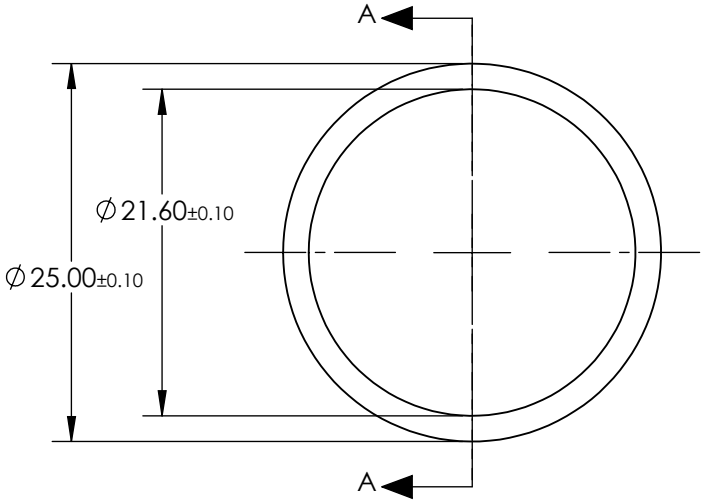

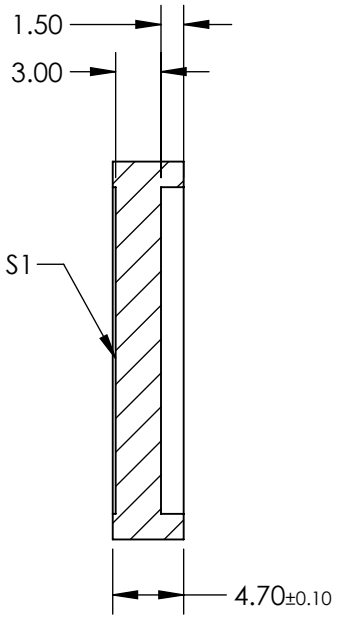

SECTION A-A

SPECIFICATIONS SUBJECT TO CHANGE WITHOUT NOTICE
DIMENSIONS ARE FOR REFERENCE ONLY

	S1
SPECTRAL RANGE	200 - 1500nm
CLEAR APERTURE (mm)	∅21.6 ±0.1
DIFFUSING ANGLE	2 ±2.5°
TRANSMISSION EFFICIENCY	90%

THIRD ANGLE PROJECTION

ALL DIMS IN mm

Edmund Optics®

TITLE: 25° DIFFUSING ANGLE 25mm DIA., UV HOLOGRAPHIC DIFFUSER

DWG NO: 48509

SHEET 1 OF 1