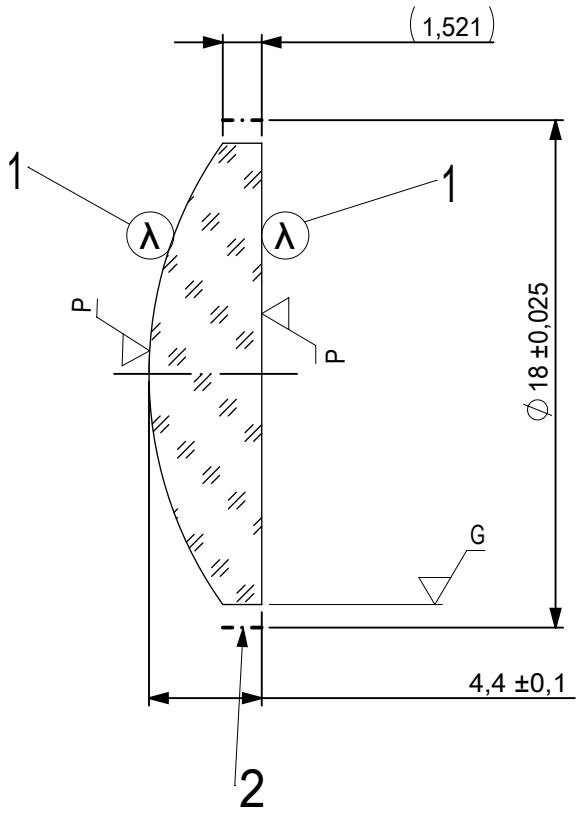

FOCAL LENGTH (EFL): 30 ±0,3

BACK FOCAL LENGTH (BFL): 27,101

1 AR COATING: NIR II
R(ABS) ≤ 1,5% FROM 750-800nm @ 0° AOI
R(ABS) ≤ 1,0% FROM 800-1550nm @ 0° AOI
R(AVG) ≤ 0,7% FROM 750-1550nm @ 0° AOI

2 BLACKENED SURFACE

LEFT SURFACE	MATERIAL	RIGHT SURFACE
R 15,505±0,016 CX	GLASS N-BK7 517/642	R ∞ PL
Øe 17		Øe 17
3/ 3 (0,5) λ=632,8 nm		3/ 3 (0,5) λ=632,8 nm
4/ -		4/ 1,93'
5/ 40 - 20 (MIL-PRF-13830B)		5/ 40 - 20 (MIL-PRF-13830B)
6/ -		6/ -

PROTECTIVE CHAMFERS AS NEEDED		FIRST ANGLE PROJECTION	Edmund Optics®
ROHS: COMPLIANT	SCALE: NONE	λ = 587,6nm	
SPECIFICATIONS SUBJECT TO CHANGE WITHOUT NOTICE. DIMENSIONS ARE FOR REFERENCE ONLY			TITLE: 18,0mm Dia, x 30,0mm FL, NIR II, Inked, Plano-Convex Lens
FOR INFORMATION ONLY: DO NOT MANUFACTURE PARTS TO THIS DRAWING		ALL DIMS IN: mm	
INDICATIONS IN ACCORDANCE WITH ISO 10110			DWG NO: 38419INK; SHEET SIZE: A4; SHEET 1 OF 1