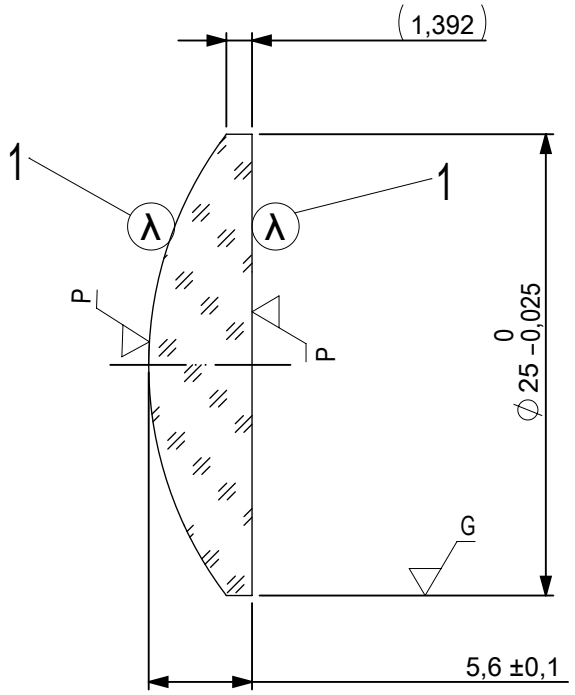

FOCAL LENGTH (EFL): 40 ±0,4

BACK FOCAL LENGTH (BFL): 36,31

1 AR COATING: 1064nm V-COAT
R(ABS) < 0,25% @ 1064nm @ 0° AOI

LEFT SURFACE	MATERIAL	RIGHT SURFACE
R 20,67±0,021 CX	GLASS N-BK7 517/642	R ∞ PL
Øe 24		Øe 24
3/ 3 (0,5) λ=632,8 nm		3/ 3 (0,5) λ=632,8 nm
4/ -		4/ 1,93'
5/ 40 - 20 (MIL-PRF-13830B)		5/ 40 - 20 (MIL-PRF-13830B)
6/ -		6/ -

PROTECTIVE CHAMFERS AS NEEDED		FIRST ANGLE PROJECTION	Edmund Optics®
ROHS: COMPLIANT	SCALE: NONE	λ = 587,6nm	
SPECIFICATIONS SUBJECT TO CHANGE WITHOUT NOTICE. DIMENSIONS ARE FOR REFERENCE ONLY			TITLE: 25,0mm Diameter x 40,0mm FL, 1064nm V-Coat, PCX Lens
FOR INFORMATION ONLY: DO NOT MANUFACTURE PARTS TO THIS DRAWING		ALL DIMS IN: mm	
INDICATIONS IN ACCORDANCE WITH ISO 10110			DWG NO: 69619 · SHEET SIZE: A4 · SHEET 1 OF 1