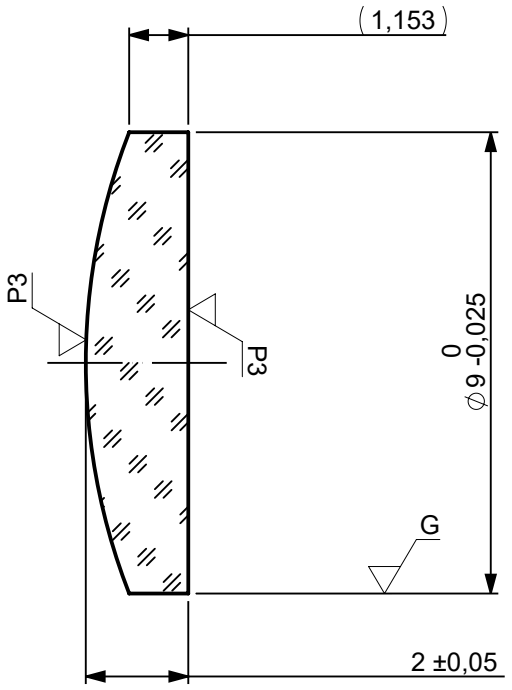

FOCAL LENGTH (EFL): 27 ±0,27

BACK FOCAL LENGTH (BFL): 25,63

1 633nm V-COAT
R(ABS) < 0,25% @ 633nm @ 0° AOI

LEFT SURFACE	MATERIAL	RIGHT SURFACE
R 12,38 CX	GLASS Fused Silica 458/678 Nd: 1,458	R ∞ PL
Øe 8,1		Øe 8,1
λ SEE NOTE 1		λ SEE NOTE 1
3/ 3 (0,5) λ=632,8 nm		3/ 3 (0,5) λ=632,8 nm
4/ -		4/ 2,18'
5/ 40 - 20		5/ 40 - 20
6/ -		6/ -

PROTECTIVE CHAMFERS AS NEEDED		FIRST ANGLE PROJECTION	Edmund Optics®	
ROHS: COMPLIANT	SCALE: NONE	λ = 587,6nm		
SPECIFICATIONS SUBJECT TO CHANGE WITHOUT NOTICE. DIMENSIONS ARE FOR REFERENCE ONLY			TITLE	9mm Dia x 27mm FL, 633NM V-COAT Coated, Plano-Convex Lens
FOR INFORMATION ONLY: DO NOT MANUFACTURE PARTS TO THIS DRAWING		ALL DIMS IN: mm		
NDICATIONS IN ACCORDANCE WITH ISO 10110			DWG NO 25877	SHEET SIZE A4 / SHEET 1 OF 1