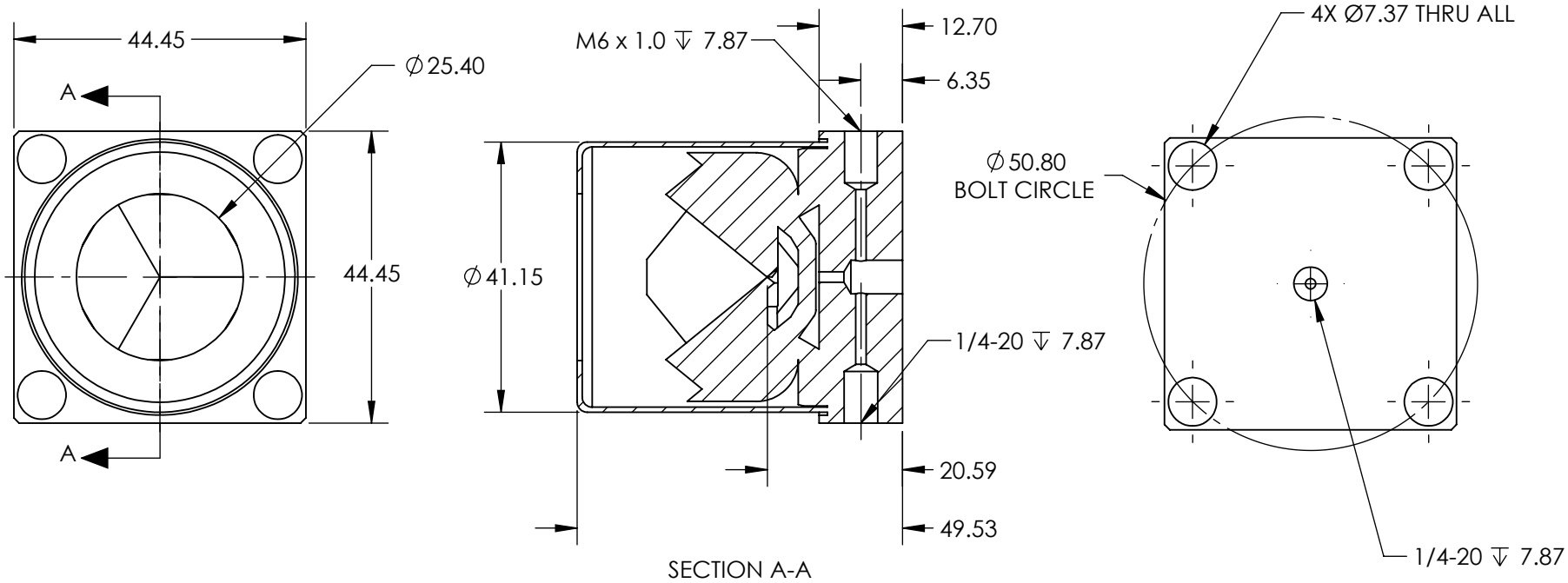

SPECIFICATIONS SUBJECT TO CHANGE WITHOUT NOTICE
DIMENSIONS ARE FOR REFERENCE ONLY

FOR INFORMATION ONLY:
DO NOT MANUFACTURE PARTS TO THIS DRAWING

Edmund Optics®

THIRD ANGLE PROJECTION		TITLE	25.4mm Clear Aperture, 1 Arcsec, Silver Retroreflector	
ALL DIMS IN	mm	DWG NO	46172	SHEET 1 OF 1